Valor™ 7000

Compact Bench Scales

The Best Compact Food Scale in its Class!

The OHAUS Valor 7000 compact food scale is the newest scale in OHAUS's line of reliable and durable products that will increase your food weighing and proportioning productivity. Dual displays and touchless sensors, user-friendly menu and setup, along with the speed and accuracy of the results provide for a seamless and hassle-free user experience that is second to none.

Standard Features Include:

- **Front and Rear Touchless Sensors Minimize Scale Contamination**—Touchless sensors allow Valor 7000 to operate certain functions without the touch of one button, reducing scale contamination and extending the life of the scale!
- **Dual Backlit Displays Allow For Quick and Easy Weighing by Two Operators**—Large front and rear displays with brilliant backlights and checkweighing LED's are among Valor 7000's user-friendly features that enhance the user experience and allow two operators to work on one scale at the same time.
- **Rapid Stabilization Provides Unmatched Throughput**—Reap the benefits of a one second stabilization time and accurate results, which will ensure your job gets done right and on time and your overall throughput is greatly increased!

Valor™ 7000 Compact Bench Scale

Front and Rear Touchless Sensors Minimize Scale Contamination

Touchless sensors located in the front and rear allow you to do all of your weighing without ever touching the scale! Determine weight and perform zero, tare, print and function operations with one swift hand motion. This will help keep your work environment clean, reduce the chances of cross-contamination and ultimately provide years of reliable service.

Dual Backlit Displays Allow for Quick and Easy Weighing by Two Operators

Valor 7000's many functional features make it one of the most user-friendly products on the market. Two large displays allow two operators to share one scale and are easy to read even from a distance. The 1.5" front display and 1" rear display are both equipped with an LCD backlight for added clarity. Use the checklights for another level of clarification and confirmation of results.

Rapid Stabilization Provides Unmatched Throughput

See your results in a blink of an eye! Valor 7000 produces precise results in just one second. Maximize your time and increase your throughput by quickly and accurately producing results. Eliminate diminished productivity and the concern of unstable results with Valor 7000.

Standard Connectivity with Flexible Options

Standard RS232 with optional Ethernet, second RS232 and USB offers additional data transfer capabilities and allows connection to multiple peripherals.

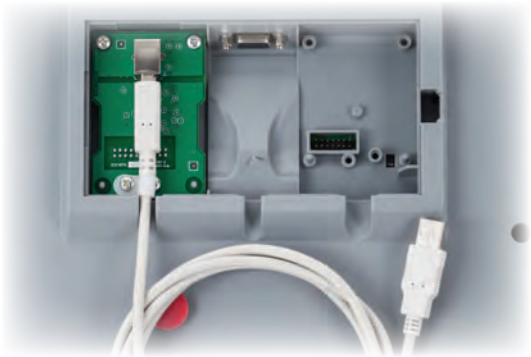

Approvals

The Valor 7000 has exceeded the standards set forth by multiple metrological and food safety regulatory bodies. NTEP, CWM, OIML, NSF and USDA approved, Valor7000 helps ensure compliance, safety, and quality, and is ready for stringent Legal for Trade applications.

Portability and Versatile Power Options

Say goodbye to being restricted to working only near power outlets! With its convenient carrying handle and rechargeable lead acid battery that can provide power for more than 210 hours, Valor 7000 can provide many hours of uninterrupted operation in the area of your workspace that most conveniently fits your needs. It can also be powered through the easy connect power cord that takes up minimal space and automatically adapts to different power line voltages and frequencies, eliminating disruptions in workflow due to power outages and shortages.

Application Modes

- **Weighing**—Determine the weight of items in the selected unit of measure.
- **Percent Weighing**—Measure the weight of a sample displayed as a percentage of a pre-established Reference Weight.
- **Check Weighing/Percent**—Compare the weight/percent of a sample against target limits. Choose from Checkweigh or Checkpercent.
- **Accumulation**—Totalization of weight or percent. Calculates total accumulated weight or percent of separate items.

Outline Dimensions

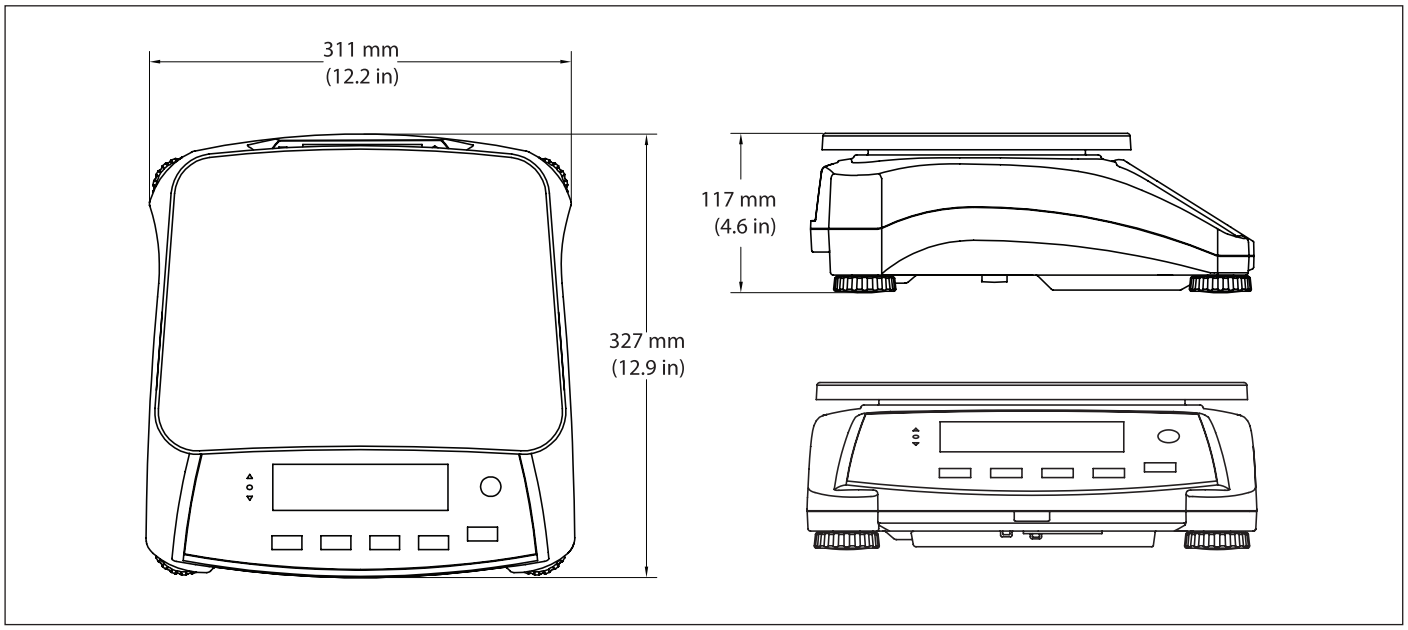

Valor™ 7000 Compact Bench Scale

Model	V71P1502T	V71P3T	V71P6T	V71P15T	V71P30T
Default Capacity × Readability	1.5 kg × 0.00005 kg 1500 g × 0.05 g	3 kg × 0.0001 kg 3000 g × 0.1 g	6 kg × 0.0002 kg 6000 g × 0.2 g	15 kg × 0.0005 kg 15000 g × 0.5 g	30 kg × 0.001 kg 30000 g × 1 g
Certified Capacity × Readability	1.5 kg × 0.0005 kg 1500 g × 0.5 g	3 kg × 0.001 kg 3000 g × 1 g	6 kg × 0.002 kg 6000 g × 2 g	15 kg × 0.005 kg 15000 g × 5 g	30 kg × 0.01 kg 30000 g × 10 g
Maxmum Displayed Resolution	1:30000	1:30000	1:30000	1:30000	1:30000
Construction	Stainless steel pan, plastic housing				
Weighing Units	kg, g, lb, oz, lb:oz				
Application Modes	Weighing, Checkweighing, Checkpercent, Percent Weighing, Accumulation				
Display	Front: 40 mm high LCD display with white backlight, 6-digit, 7-segment Rear: 26 mm high LCD display with white backlight, 6-digit, 7-segment				
Checkweighing Indicators	3 LED (yellow, green, red) with configurable operation and alert beeper				
Keypad	5 mechanical keys plus two touchless sensors				
Zero Range	4% or 20% of full scale capacity				
Tare Range	Full capacity by subtraction				
Stabilization Time	1 second				
Auto-Zero Tracking	Off, 0.5, 1 or 3 divisions				
Safe Overload Capacity	150% of capacity				
Power	100-240 VAC / 50-60 Hz internal universal power supply, internal rechargeable lead acid battery				
Battery Life	210 hours continuous use with 12 hour recharge time				
Calibration	External, with user-selectable calibration weight				
Interface	Built-in RS232, optional 2nd RS232, USB, Ethernet				
Operating Temperature Range	-10° C to 40° C				
Ingress Protection	IP43				
Pan Size (W × L)	300 × 225 mm				
Scale Dimensions (W × L × H)	311 × 327 × 117 mm				
Shipping Dimensions (W × L × H)	397 × 447 × 195 mm				
Net Weight	4.2 kg				
Shipping Weight	5.45 kg				

Other Standard Features and Equipment

ABS housing, stainless steel platform, 210 hours of battery life, 3 LED (yellow, green, red) checkweighing lights with selectable operation and audible signal settings, transportation handle, sealed front panel, menu lockswitch, up front level indicator, adjustable leveling feet, selectable environmental and auto-print settings, stability indicator, overload and underload indicators, low battery indicator, auto shut-off, auto tare

Approvals

- **Metrology:** OIML/EC 3000e
- **Product Safety:** CAN/CSA-C22.2 No. 61010-1-04; UL Std. No. 61010-1 (2nd Edition)
- **Electromagnetic Compatibility:** FCC, Part 15, Class A; EN61326-1:2006 (Class B); C-Tick
- **Environmental Protection:** IP43
- **Food Safety:** NSF; USDA
- **Other:** WEEE/ROHS

Accessories

Ethernet Kit 30037447
Second RS232 Kit 30037448
USB Kit 30037449
Weigh Below Hook 30037450
SF40A Impact Printer ..... Contact Ohaus

OHAUS CORPORATION
www.ohaus.com
ISO 9001:2008
Registered Quality Management System

80774659 © Copyright Ohaus Corporation

OHAUS®